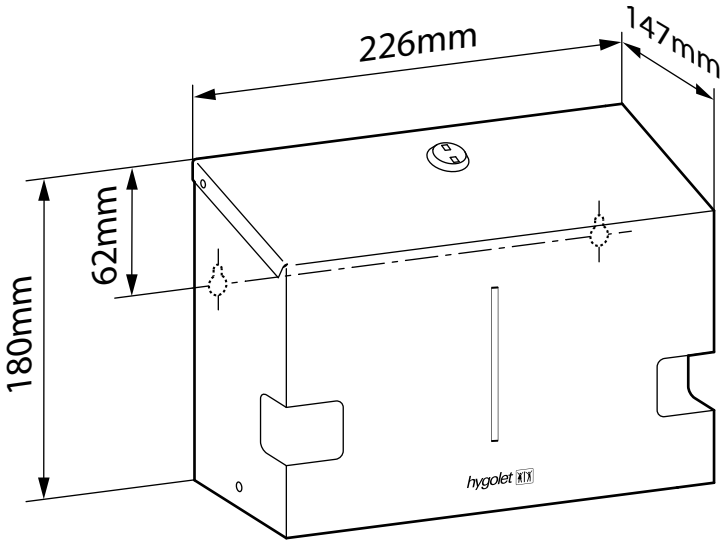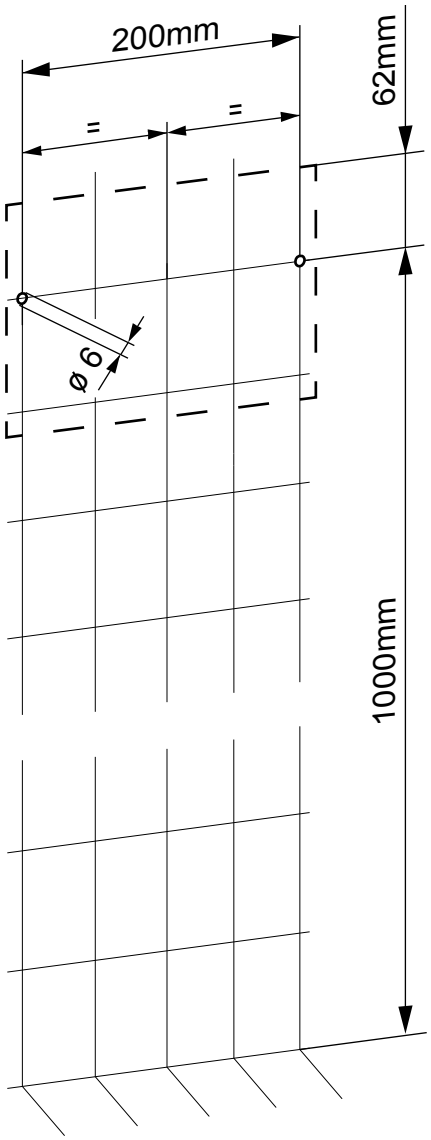Duoroll Art-Nr. 50.749