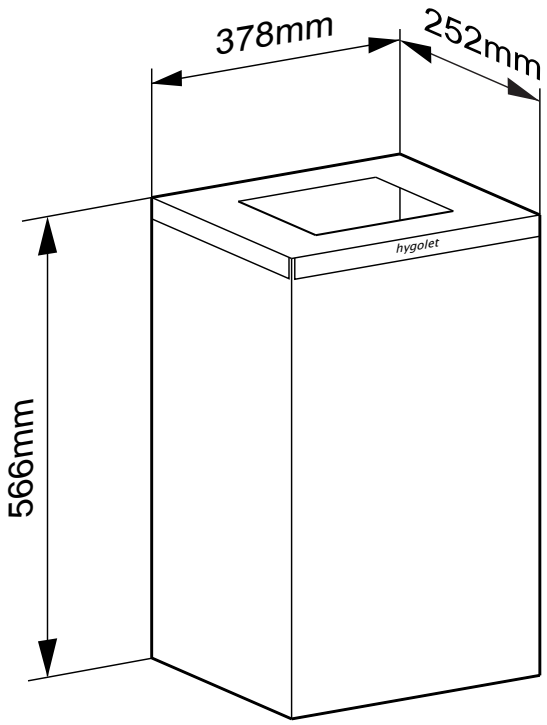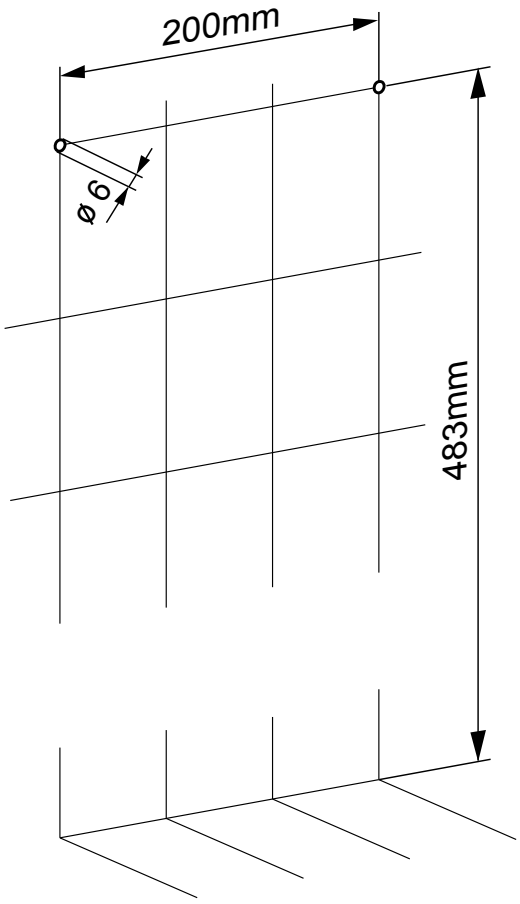Hygobox Art-Nr. 50.730