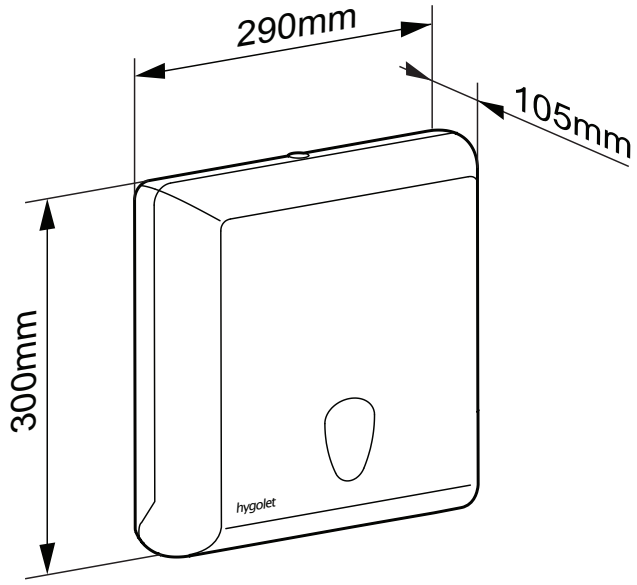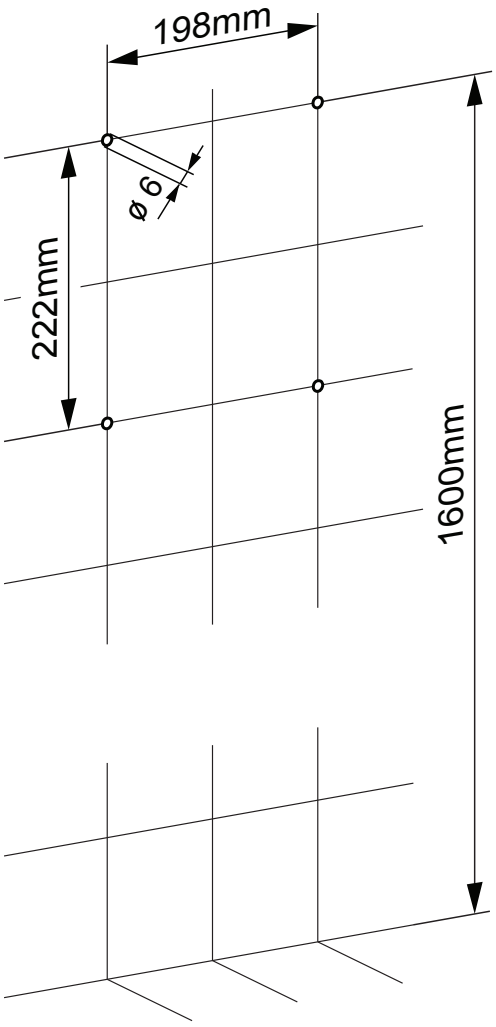Papifold M Art-Nr. 50.697