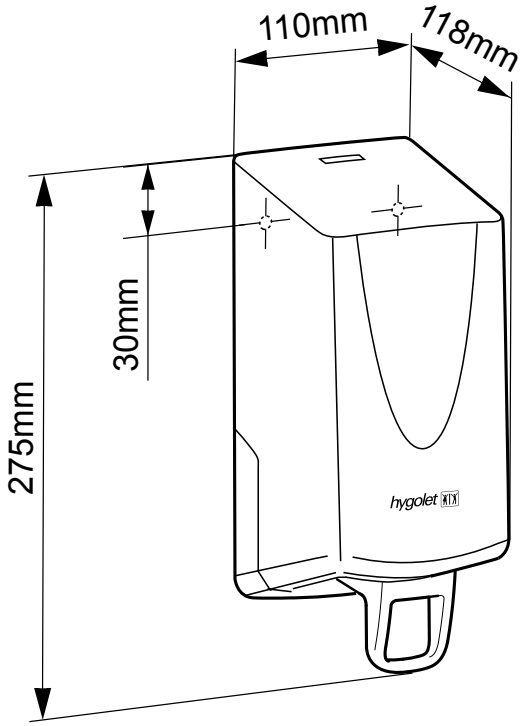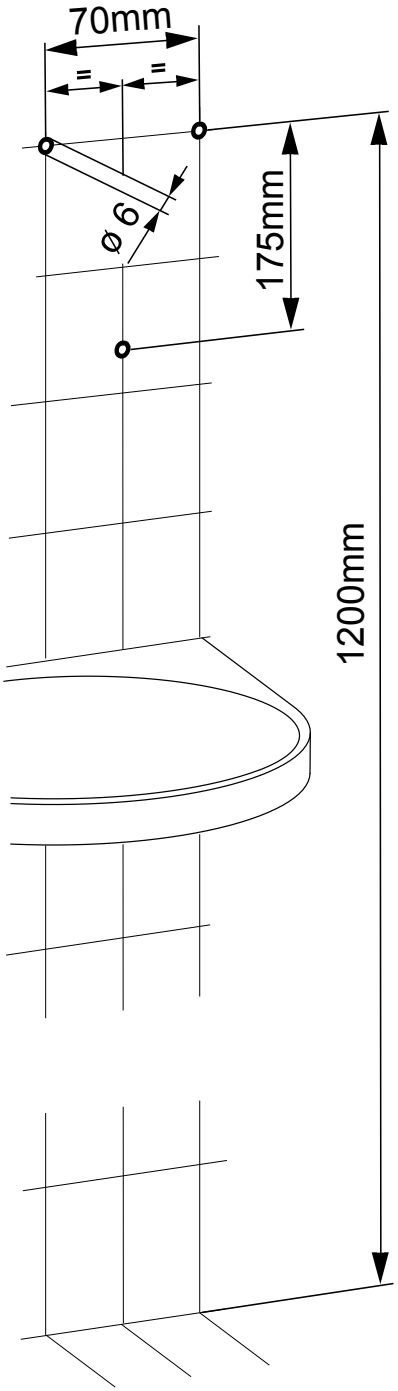Hygofoam Art-Nr. 50.646