Hygolet (Europe) AG

Wallbox Art-Nr. 50.520

hygolet
hygiene solutions

1

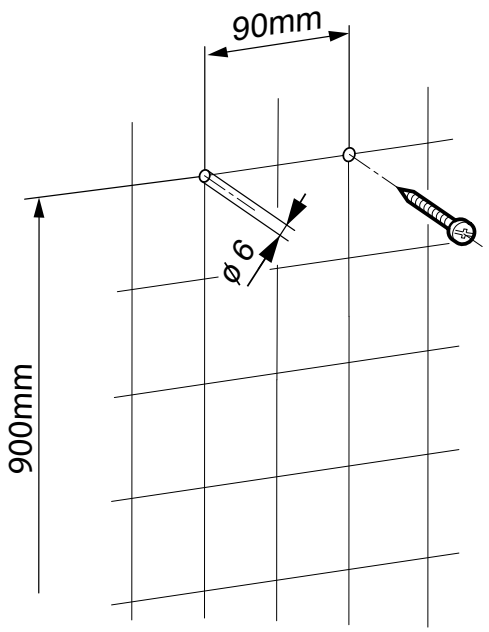

2

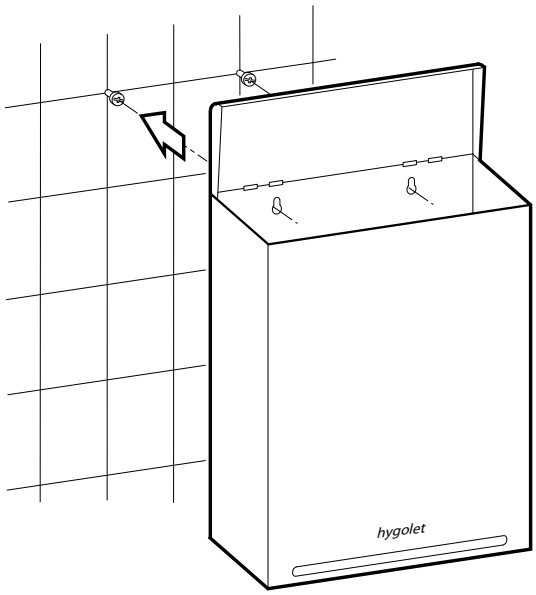

3

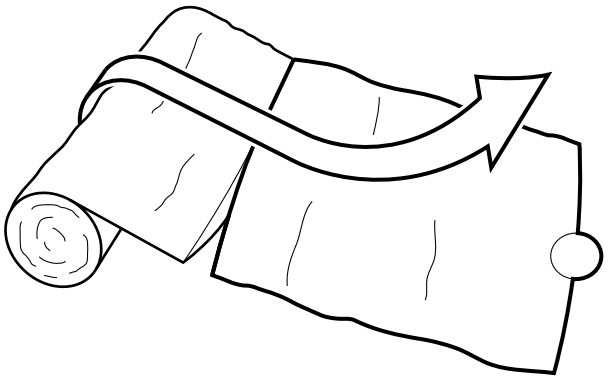

4

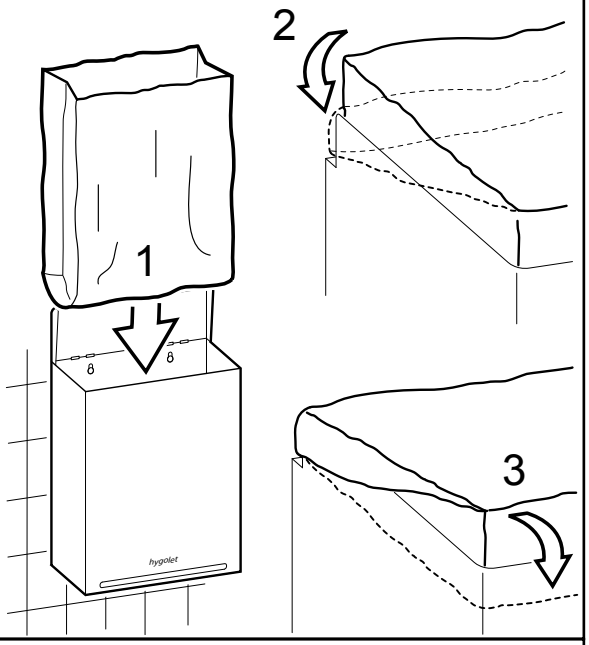

5 *CLEANING*

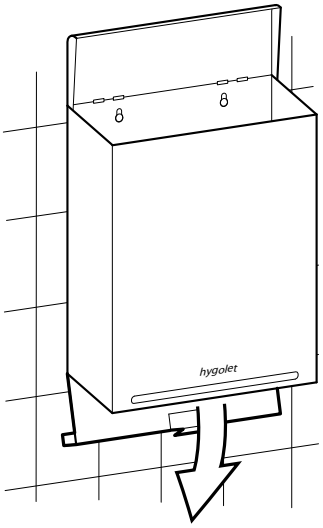

6 *CLEANING*

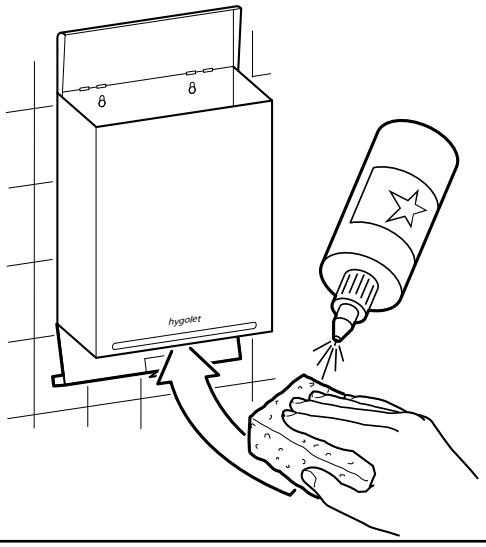

V01/2016