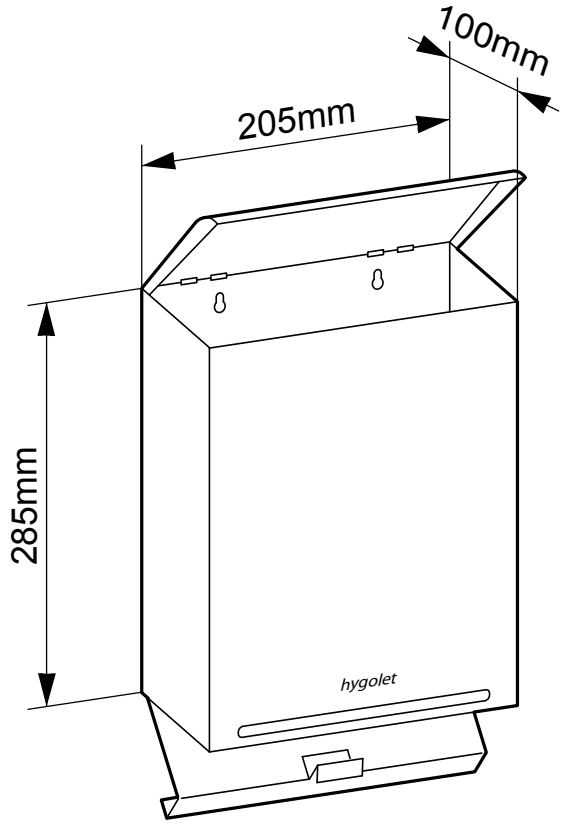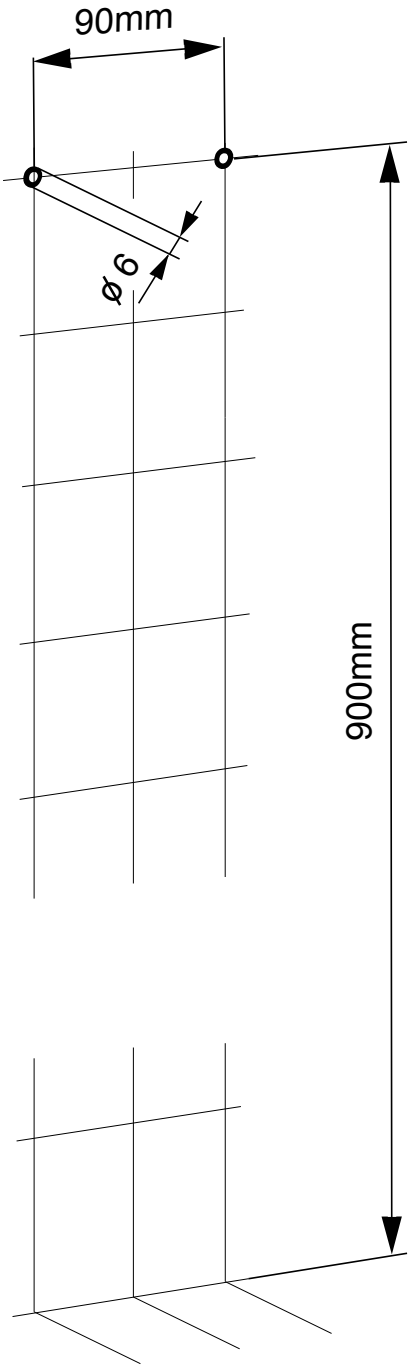Wallbox Art-Nr. 50.520